ES30C/ES31C Series Positioning System

ESPRIT® SYSTEM WITH IOP CAMERA AND OPTIONAL WIPER

Product Features

- Receiver, Pan & Tilt, and Enclosure with an Integrated Optics Package (IOP)
- Auto Focus with Manual Override
- Programmable Camera Settings
- On-Screen Compass, Tilt, and Zoom Display
- Auto Iris with Manual Override
- Integral Multi-protocol Receiver/Driver
- Variable Speed Pan: 0.1° to 100°/second with Proportional Pan
- 360° Continuous Pan Rotation
- Zone Blanking – Allows up to eight zones (programmable in size) to be set to output blank video
- Operational in 90 mph Wind Conditions; Can Withstand Wind Velocity Up to 130 mph
- Pan Preset Speed of 100° Per Second in 50 mph Winds and 50° Per Second in 90 mph Winds
- Tilt Range of +33° to -83° from Horizontal
- Preset Positioning, Patterns, Multiple Scan Modes
- Designed for Minimal Maintenance, No Gears to Adjust

ESPRIT IOP SYSTEM WITH WIPER (SHOWN WITH WALL MOUNT AND POLE ADAPTER)

The **ES30C** and **ES31C** are innovative additions to the successful product line of Esprit® Series Integrated Positioning Systems. The **ES30C** and **ES31C** not only combine a receiver, pan & tilt, and enclosure in a single, easy-to-install system, they also include an Integrated Optics Package (IOP). The Integrated Optics Package contains an auto-focus camera and lens module with programmable features.

For a wide range of applications, the **ES30C** and **ES31C** Series feature a choice of three different IOP cameras: a color camera (470 VL) with a 160X zoom lens (16X optical, 10X electronic), a high-resolution camera with LowLight™ color technology and 220X zoom lens (22X optical, 10X electronic), and a high-resolution color/black-white camera with an infrared cut filter and 230X zoom lens (23X optical, 10X electronic).

A powder-coated, aluminum construction makes the **ES30C** and **ES31C** ideal for either indoor or outdoor applications. The system has an absolute operating temperature range of -50° to 140°F (-45° to 60°C). Within two hours after power-up, the entire unit can de-ice and be operational from a temperature of -13°F (-25°C).

The **ES31C Series** includes a window wiper. The wiper is completely integrated into the enclosure and does not interfere with the viewing range of the system. The wiper can be programmed to delay between wipes and to automatically shut off after a specified period. The wiper design also allows for easy replacement of the wiper blade. A built-in heater, window defroster/defogger, sun shroud, and insulation blanket are standard features on the **ES30C** and **ES31C** units. All units also include an open collector auxiliary output that functions for two seconds before deactivating.

The **ES30C** and **ES31C** Series variable pan and tilt speeds range from 0.1 to 40 degrees per second in manual pan mode and 0.1 to 20 degrees per second in manual tilt. Pan preset and turbo speeds are 100 degrees per second in wind speeds of 50 mph and 50 degrees per second in the 90-mph wind-speed profile. Tilt preset speed is 30 degrees per second. The **ES30C** and **ES31C** are capable of 360 degrees of continuous pan rotation. The tilt range allows for horizontal viewing of +33 to -83 degrees. There are 80 preset positions with a preset accuracy of one-quarter degree programmable through system software.

The systems are available with an input voltage of 24 VAC or with a selectable power source of 120/230 VAC. The **ES30C** and **ES31C** also have a power-up recovery mode that allows the user to specify what operation the system will resume whenever the power is cycled.

TECHNICAL SPECIFICATIONS

PRODUCT FEATURES

- Deterrent Surveillance
- Integral Multi-Protocol Receiver/Driver
- Integral Camera Enclosure
- Variable Speed 0.1-100°/Second
- 360° Continuous Pan Rotation
- Quick and Easy Installation
- +33° to -83° Tilt Range
- Operational in 90 mph Winds, Can Withstand Wind Velocity Up to 130 mph
- Pan Preset Speed of 100° Per Second in 50 mph Winds and 50° Per Second in 90 mph Winds
- Meets NEMA 4X and IP66 Standards – Pan & Tilt and Enclosure
- Variable Scan Speeds (1-40°/Second)
- Translator Boards for Selected Competitive Protocols
- Easy to Install – Quick and Simple Electrical Connections
- 24 VAC or 120/230 VAC Selectable
- Designed for Minimal Maintenance, No Gears to Adjust
- Full Continuous-Duty Warranty

SOFTWARE/HARDWARE

- 80 Presets with Labels
- Auto, Frame and Random Scan
- Programmable Power-up Mode
- Programmable Park
- Programmable Manual Limit Stops (Pan)
- Programmable Scan Limit Stops (Pan)
- Patterns
- Proportional Pan/Tilt
- Eight Zones (programmable in size) Can Be Labeled with Up to 20 Characters Each
- Up to Eight Zones (programmable in size) Can Be Set to Output Blank Video
- 10-Inch Integrated Enclosure with Pre-Assembled, IOP Camera
- Sun Shroud, Heater/Window Defroster, and Insulation All Standard
- One Auxiliary Output
- Integrated Window Wiper with Programmable Delay and Shut-Off (ES31C Models)

ALL CAMERAS

- Auto Focus with Manual Override
- Auto Iris with Manual Override
- Programmable Settings
- AC Line Lock
- NTSC/PAL

ELECTRICAL

Input Voltage	24, 120, or 230 VAC, 50/60 Hz; switch selectable for 120/230 VAC inputs
Input Voltage Range	±10%
Power Consumption	Maximum 70 vA per system
Heater and Defroster	Thermostatically controlled
Electrical Connections	Two power source connections made at mount location with wire splices and one ground wire splice; one BNC receptacle and four wire splices at mount location for RS-422 D and P protocols; two wire splices for open collector auxiliary output
Aux 2	Open collector output with 2-second activation; connected relay must require no more than 32 VDC and 40 mA to energize relay coil; wire length between Esprit and relay must be less than 100 ft (30 m)

Video Coaxial Cable Max. Wiring Distances

Cable Type*	Maximum Distance
RG59/U	750 feet (229 m)
RG6/U	1,000 feet (305 m)
RG11/U	1,500 feet (457 m)

*Minimum cable requirements:
75 ohms impedance; all-copper center conductor; all copper braided shield with 95% braid coverage

MECHANICAL

Pan Movement	360° Continuous pan rotation
Vertical Tilt	Unobstructed +33° to -83°
Variable Pan/Tilt Speed	
Pan	0.1° to 40°/sec variable-speed operation, 100°/sec Turbo
Tilt	0.1° to 20°/sec variable-speed operation
Preset Speeds	
Pan	100°/sec
Tilt	30°/sec
Camera Mounting	Integrated camera sled assembly
Latches	One link-lock, No. 3 stainless-steel latch; can be secured with padlock (not supplied)

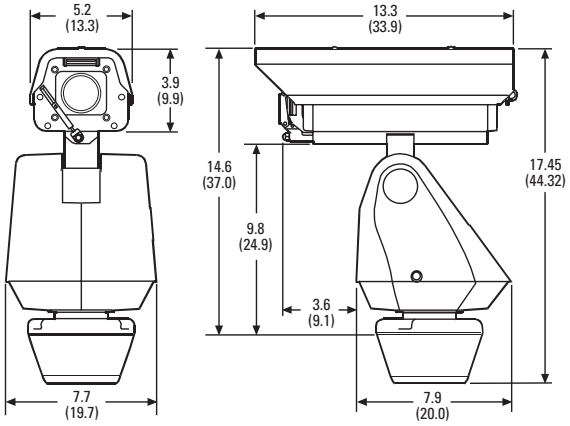

NOTE: VALUES IN PARENTHESES ARE CENTIMETERS; ALL OTHERS ARE INCHES.

TECHNICAL SPECIFICATIONS

GENERAL

Construction	Die-cast, extruded and sheet aluminum; stainless steel hardware
Finish	Gray polyester powder coat
Viewing Window	0.23" (5.84 mm) thick, optically clear impact/scratch-resistant coated LEXAN®
Operating Temperature	-50° to 122°F (-45° to 50°C) for sustained system operation or 140°F (60°C) absolute maximum. Within two hours after power-up, the entire unit can de-ice and be operational from a temperature of -13°F (-25°C).
Operating Environment	Will remain operational in 90 mph wind conditions; withstands 130 mph

Weight	With Pedestal Adapter	With Wall Mount
Unit		
Standard w/IOP	20 lb (9.0 kg)	22 lb (9.9 kg)
With Wiper and IOP	21 lb (9.5 kg)	23 lb (10.4 kg)
Shipping		
Standard w/IOP	25 lb (11.3 kg)	28 lb (12.6 kg)
With Wiper and IOP	26 lb (11.7 kg)	29 lb (13.1 kg)

CERTIFICATIONS/RATINGS

- CE, Class B (all models)
- UL Listed (NTSC models)
- UL Listed to Canadian safety standards (NTSC models)
- FCC, Class B (NTSC models)
- Meets NEMA 4X and IP66 standards

CAMERA/OPTICS

	Color/Black-White (23X)	Color, LowLight™ (22X)	Color, LowLight™ (16X)
Signal Format	NTSC, PAL	NTSC, PAL	NTSC, PAL
Scanning System	Progressive	2:1 Interlace	2:1 Interlace
Image Sensor	1/4-inch CCD	1/4-inch Ex-View CCD	1/4-inch interline transfer CCD
Effective pixels			
NTSC	724 x 494	768 x 494	768 (H) x 494 (V)
PAL	724 x 582	752 x 582	752 (H) x 582 (V)
Horizontal Resolution			
NTSC	>470 TV lines	>470 TV lines	470 TV lines
PAL	>470 TV lines	>460 TV lines	460 TV lines
Lens	f/1.6 (f = 3.6~82.8 mm optical)	f/1.6 (f = 4~88 mm optical)	f/1.4 (f = 4~6.4 mm optical)
Zoom	23X optical, 10X electronic	22X optical, 10X electronic	16X optical, 10X electronic
Zoom Speed	4.2 seconds	3.9 seconds	
Horizontal Angle of View	54° at 3.6 mm wide zoom; 2.5° at 82.8 mm telephoto zoom	47.3° at 4.0 mm wide zoom; 2.2° at 88 mm telephoto zoom	43° at 4.0 mm wide zoom; 3° at 64 mm telephoto zoom
Focus	Automatic with manual override	Automatic with manual override	Automatic with manual override
Maximum Sensitivity @35 IRE			
NTSC	0.08 lux at 1/2 sec shutter **(color)** 0.3 lux at 1/60 sec shutter **(B/W)** 0.013 lux at 1/2 sec shutter **(B/W)**	0.02 lux at 1/2 sec shutter	0.05 lux at 1/2 sec shutter
PAL	0.08 lux at 1/1.5 sec shutter **(color)** 0.3 lux at 1/50 sec shutter **(color)** 0.02 lux at 1/1.5 sec shutter **(B/W)**	0.02 lux at 1/1.5 sec shutter	0.05 lux at 1/1.5 sec shutter
Sync System	Internal/AC line lock, phase adjustable via remote control, V-Sync*	Internal/AC line lock, phase adjustable via remote control, V-Sync*	Internal/AC line lock, phase adjustable via remote control, V-Sync*
White Balance	Automatic with manual override*	Automatic with manual override*	Automatic with manual override*
Shutter Speed	Automatic (electronic iris)/Manual	Automatic (electronic iris)/Manual	Automatic (electronic iris)/Manual
NTSC	1/2~1/30,000*	1/2~1/30,000*	1/2~1/30,000*
PAL	1/1.5~1/30,000*	1/1.5~1/30,000*	1/1.5~1/30,000*
Iris Control	Automatic Iris Control with manual override*	Automatic Iris Control with manual override*	Automatic Iris Control with manual override*
Gain Control	Automatic/OFF*	Automatic/OFF*	Automatic with manual override*
Video Output	1 Vp-p, 75 ohms	1 Vp-p, 75 ohms	1 Vp-p, 75 ohms
Video Signal to Noise	>50 dB	>50 dB	>46 dB

*Manual control of camera setup functions can be done with CM6700, CM6800, CM8500, CM9500, CM9740, CM9760, KBD200A, KBD300A, and MPT9500 controllers, but not with CM7500, MPT9000 or KBD9000 controllers.

MODEL NUMBERS

MODELS

Model		Format	Pedestal Mount		Wall Mount	
			24 VAC	120/230 VAC	24 VAC	120/230 VAC
16X Color	Standard	NTSC PAL	ES30C16-2N ES30C16-2N-X	ES30C16-5N ES30C16-5N-X	ES30C16-2W ES30C16-2W-X	ES30C16-5W ES30C16-5W-X
	With Wiper	NTSC PAL	ES31C16-2N ES31C16-2N-X	ES31C16-5N ES31C16-5N-X	ES31C16-2W ES31C16-2W-X	ES31C16-5W ES31C16-5W-X
22X Color	Standard	NTSC PAL	ES30C22-2N ES30C22-2N-X	ES30C22-5N ES30C22-5N-X	ES30C22-2W ES30C22-2W-X	ES30C22-5W ES30C22-5W-X
	With Wiper	NTSC PAL	ES31C22-2N ES31C22-2N-X	ES31C22-5N ES31C22-5N-X	ES31C22-2W ES31C22-2W-X	ES31C22-5W ES31C22-5W-X
23X Color/ B-W	Standard	NTSC PAL	ES30CBW18-2N ES30CBW18-2N-X	ES30CBW18-5N ES30CBW18-5N-X	ES30CBW18-2W ES30CBW18-2W-X	ES30CBW18-5W ES30CBW18-5W-X
	With Wiper	NTSC PAL	ES31CBW18-2N ES31CBW18-2N-X	ES31CBW18-5N ES31CBW18-5N-X	ES31CBW18-2W ES31CBW18-2W-X	ES31CBW18-5W ES31CBW18-5W-X

REPLACEMENT INTEGRATED OPTICS PACKAGE (IOP CAMERA) MODULES

The following IOP modules are replacement components only; they are not interchangeable.

ESIOPC16	Esprit high resolution color camera and lens module, 16X, NTSC format
ESIOPC16-X	Same as ESIOPC16 except PAL format
ESIOPC22	Esprit high resolution color camera and lens module, 22X NTSC format
ESIOPC22-X	Same as ESIOPC22 except PAL format
ESIOPCBW18	Esprit hight resolution color/B&W camera and lens module, 23X, NTSC format
ESIOPCBW18-X	Same as ESIOPCBW18 except PAL format

OPTIONAL ACCESSORIES

ES-REPLBLADE-2	Package of two window wiper replacement blades
ES-REPLBLADE-10	Package of ten window wiper replacement blades

RELATED PRODUCTS

TXB Series	Translator boards for AD Manchester, Philips (Burle), Sensormatic, and Vicon® protocols.

RECOMMENDED MOUNTS

Esprit Series	Includes mounts for wall, pedestal, corner, parapet, and pole applications.
PM2000/PM2010	Pedestal mount with cable feedthrough. For use with Esprit systems with pedestal adapter plate.

RECOMMENDED POWER SUPPLIES

MCS Series	24 VAC Indoor transformer
WCS Series	24 VAC Weatherproof transformer

RECOMMENDED CONTROLS

All Pelco multiplexer and matrix switchers:
CM6700, CM6800, CM9740, CM9760, MPT9500, MPT9000, MX4000 Series, and NET100 Series PelcoNet™.

RECOMMENDED KEYBOARD CONTROLS

(For use in Direct Mode operation only)

KBD200A	Desktop keyboard, multi-speed PTZ control.
KBD300A	Desktop keyboard, vari-speed PTZ control.

Note: System keyboards require a remote keyboard wiring kit (KBDKIT) for direct mode operation; allows two-wire control of up to 16 daisy-chained receivers (or Esprit systems). Keyboards output Pelco P protocol at 4800 baud.

WIDE ANGLE (4 mm)

22X (88 mm)

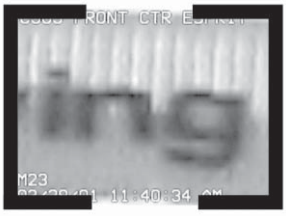

176X (8X DIGITAL)

Pelco Worldwide Headquarters:
3500 Pelco Way, Clovis, California 93612-5699 USA
USA & Canada Tel: (800) 289-9100 • FAX (800) 289-9150 • DataFAX (800) 289-9108
International Tel: (559) 292-1981 • FAX (559) 348-1120 • DataFAX (559) 292-0435
www.pelco.com

Vicon® is a registered trademark of the Vicon Industries, Inc.
LEXAN® is a registered trademark of the General Electric Company.
Coaxitron®, Genex® and Esprit® are registered trademarks of Pelco.
PelcoNet™ and LowLight™ are trademarks of Pelco.
Specifications subject to change without notice.
©Copyright 2003, Pelco. All rights reserved.